1

INSTALLATION MONTAJ MONTAGE MONTÁŽNÝ INSTALLAZIONE

التجميع MONTÁŽNÍ УСТАНОВКА INSTALAÇÃO INSTALACIÓN

MB003

REV6 14112018

2

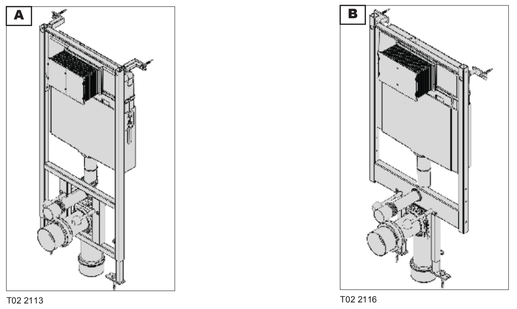

T02 2113

T02 2116

3

T02 2113

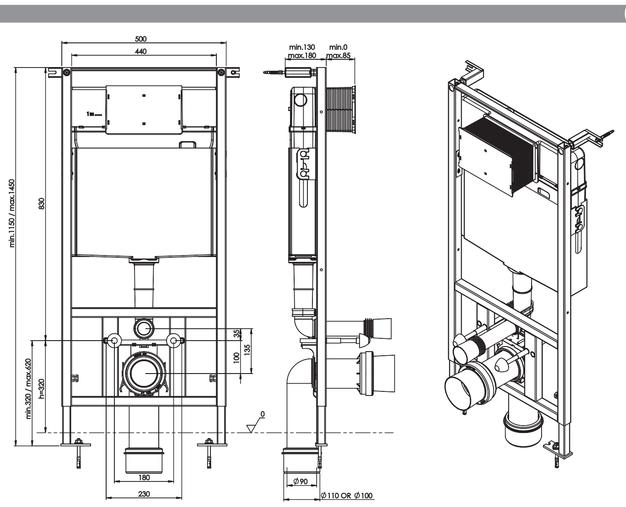

4

T02-2113

NO	CODE	QTY
1	GR0219	1
2	GR0351	4
3	GR0009	1
4	GR0003	1
5	GR0020	2
6	GR0254	1
7	GR0045	1
8	GR0051	1
9	GR0050	1
10	GR0044	1
11	GR0048	1
12	GR0047	1
13	GR0029	1
14	GR0071	1
15	GR0005	1
16	GR0004	1
17	GR0006	2
18	GR0055	2
19	GR0016	2
20	GR0054	2
21	GR0052	2
22	GR0017	2
23	GR0268	2
24	GR0485	1
25	GR0525	2
26	GR0386	2
27	GR0181	4
28	GR0272	2
29	GR0484	1
30	GR0304	1

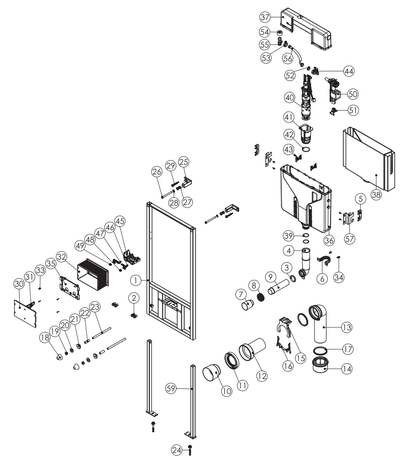

NO	CODE	QTY
31	GR0299	1
32	GR0303	1
33	GR0042	4
34	GR0877	8
35	GR0305	1
36	GR0001	1
37	GR0002	1
38	GR0008	1
39	GR0053	2
40	B01	1
41	BG0005	1
42	BG0033	1
43	GR0040	2
44	GR0030	1
45	GR0032	1
46	GR0359	1
47	GR0358	1
48	GR0214	1
49	GR0213	1
50	747UK118B	1
51	GR0714	1
52	7-231	1
53	GR0027	1
54	GR0377	1
55	GR0197	1
56	GR0251	1
57	GR0884	1
58	GR0882	1
59	GR0842G	2

5

T02-2116

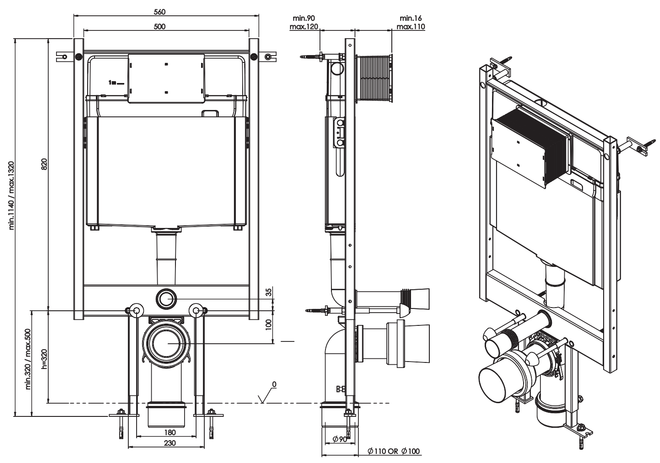

6

T02-2116

NO	CODE	QTY
1	GR0146	1
2	GR0145	2
3	GR-S34	1
4	GR0268	2
5	GR0052	2
6	GR0017	2
7	GR0055	2
8	GR0016	2
9	GR0054	2
10	GR-S37	1
11	GR0050	1
12	GR0051	1
13	GR0045	1
14	GR0485	1
15	GR0003	1
16	GR0009	1
17	GR0114	4
18	GR0312	1
19	GR0313	1
20	ø 110 GR0071 ø 100 GR0379	1
21	GR0029	1
22	GR0006	2
23	GR0047	1
24	GR0048	1
25	GR0044	1
26	GR0351	4
27	GR0020	2

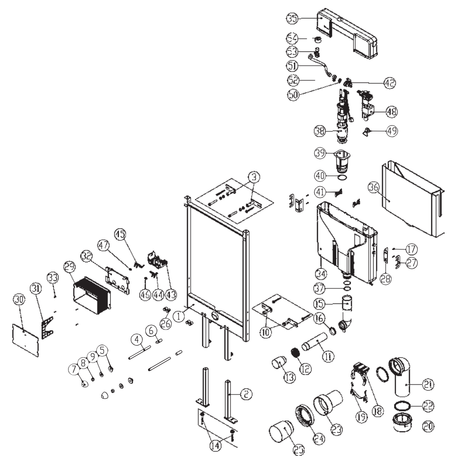

NO	CODE	QTY
28	GR0028	2
29	GR0303	1
30	GR0304	1
31	GR0299	1
32	GR0305	1
33	GR0042	4
34	GR0001	1
35	GR0002	1
36	GR0008	1
37	GR0053	2
38	B01	1
39	BG005	1
40	BG033	1
41	GR0040	2
42	GR0030	1
43	GR0032	1
44	GR0359	1
45	GR0358	1
46	GR0214	1
47	GR0213	1
48	747118B	1
49	GR0714	1
50	7-231	1
51	GR0251	1
52	GR0027	1
53	GR0197	1
54	GR0377	1

7

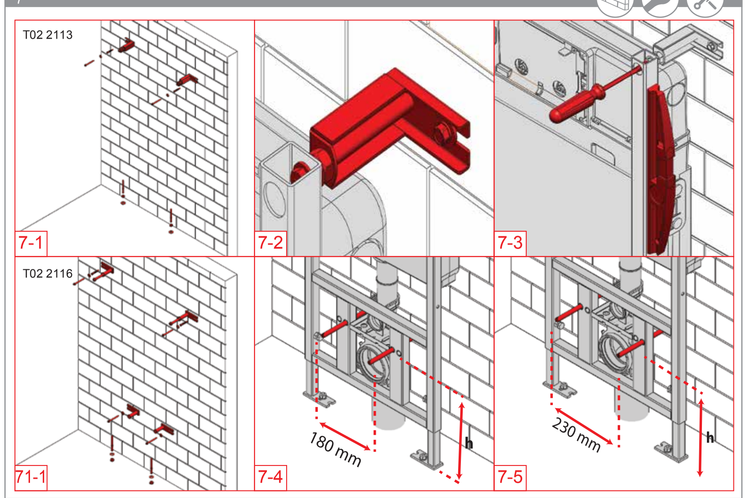

8

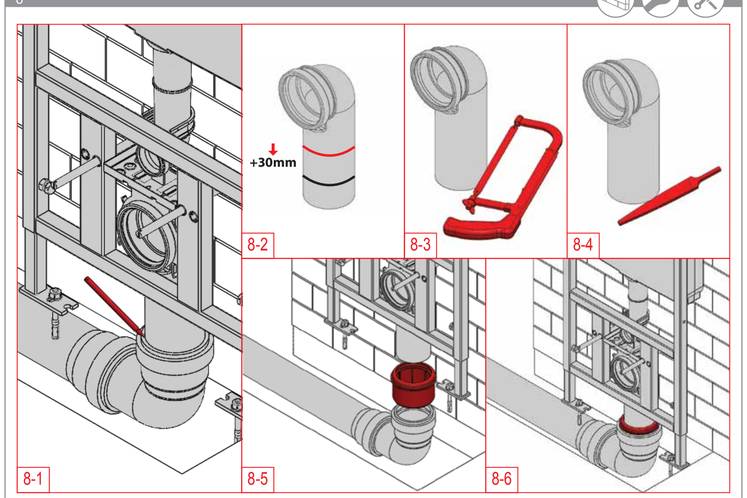

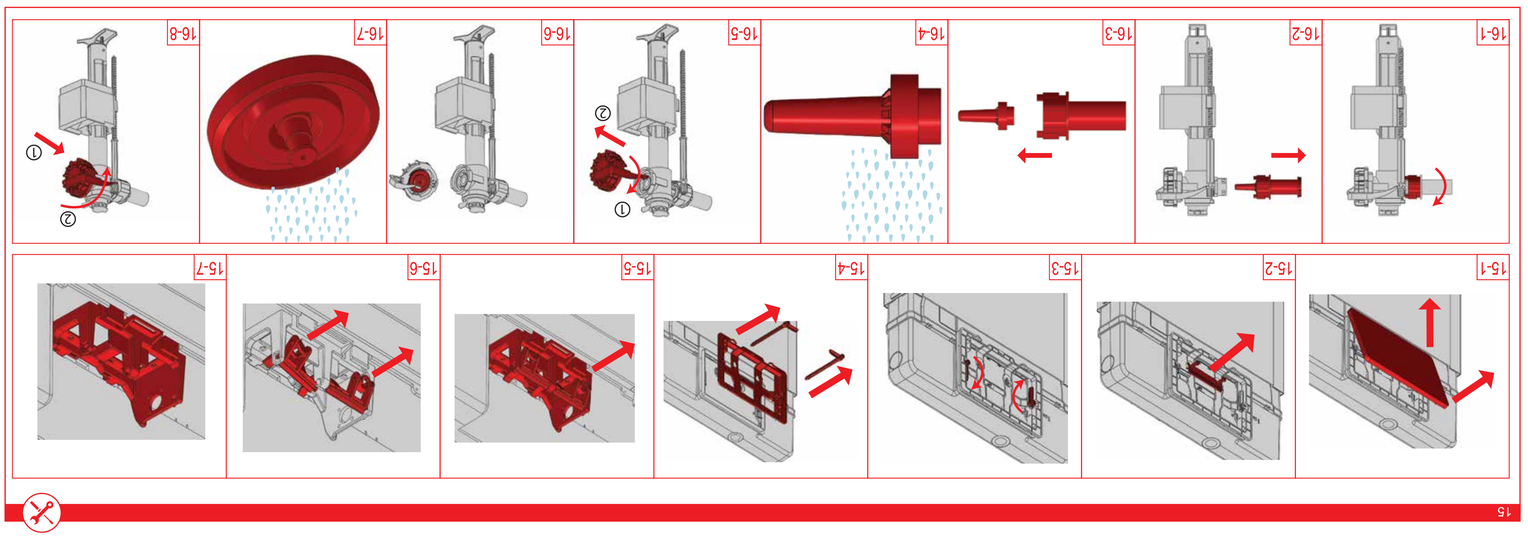
15
15-1
15-2
15-3
15-4
15-5
15-6
15-7
16-1
16-2
16-3
16-4
16-5
16-6
16-7
16-8

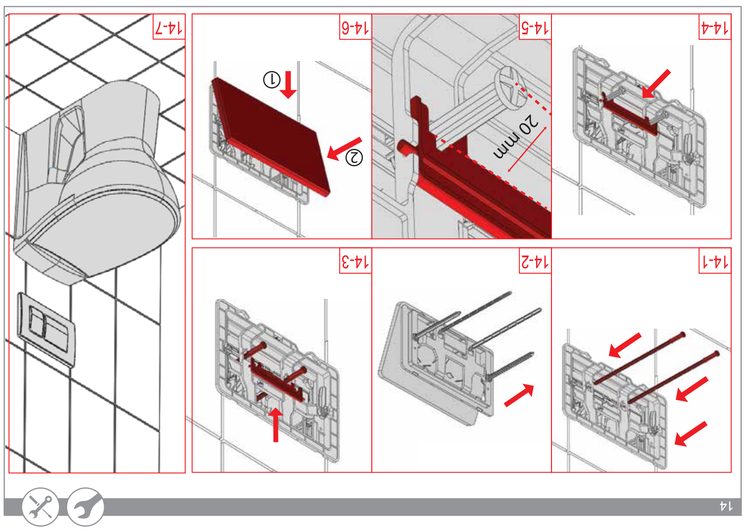
14
14-1
14-2
14-3
14-4
14-5
20 mm
14-6
14-7

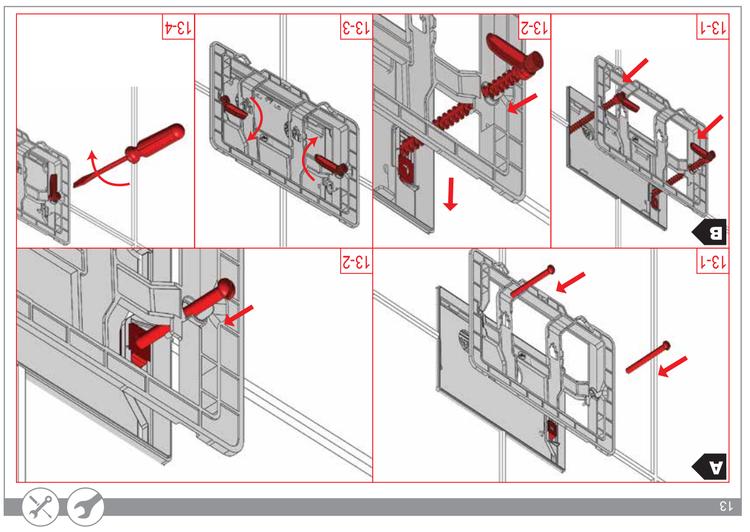
13
A
B
13-1
13-2
13-3
13-4

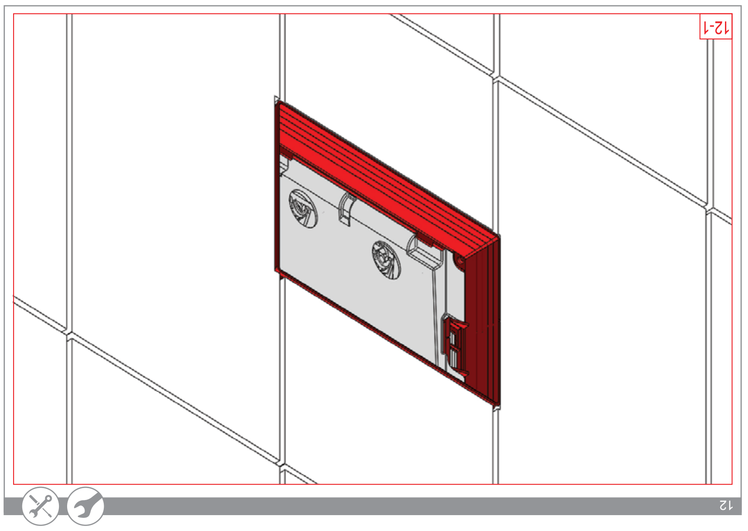
12
12-1

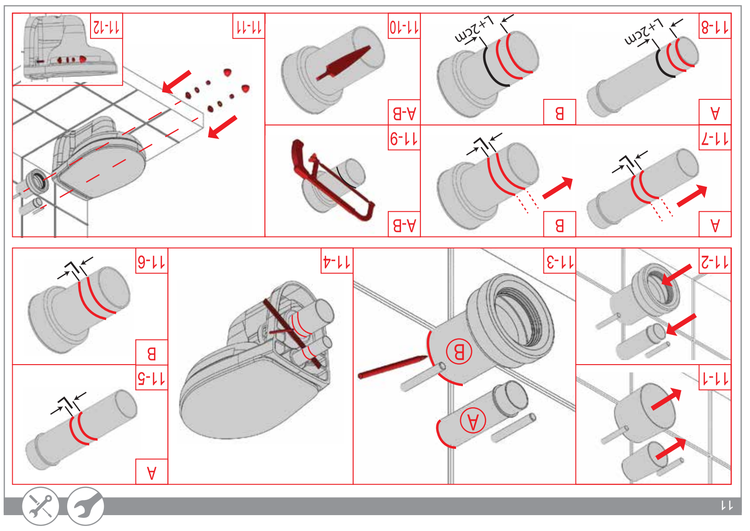
11
11-1
11-2
11-3
11-4
11-5
11-6
11-7
11-8
11-9
11-10
11-11
11-12
A
B
A-B
L+2cm

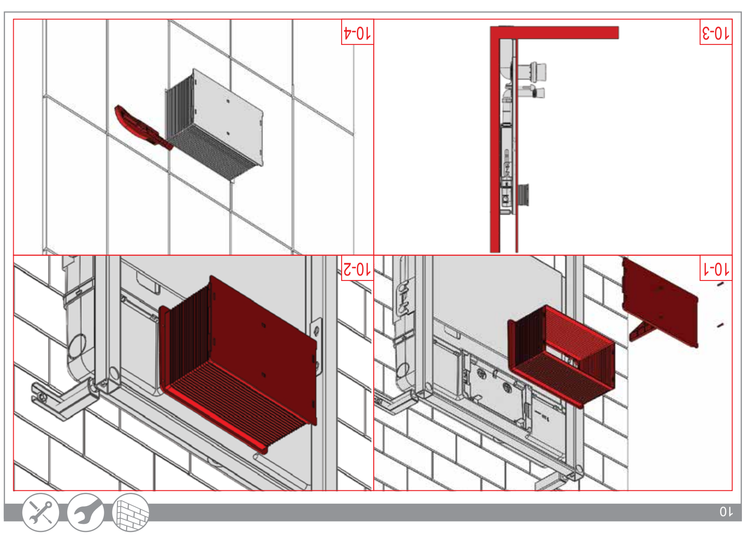
10
10-1
10-2
10-3
10-4

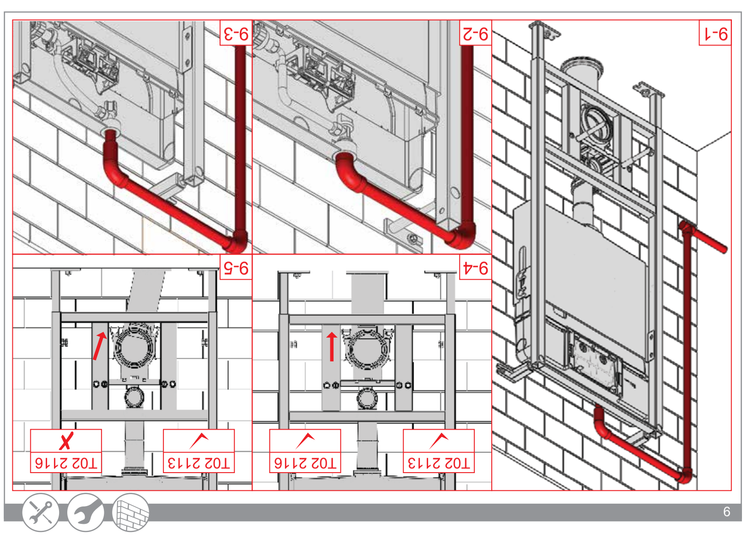
9
9-1
9-2
9-3
9-4
9-5
TO2 2113
TO2 2116
TO2 2113
TO2 2116