E.C.A. NITA BASIN MIXER

TOGETHER FOR YEARS

Product Description	
Product Number	102188034EX
Product Name	Basin Mixer without Waste Set
EAN Barcode	8693261058402

Technical Specification	
Aerator	Neoperl Perlator HC
Cartridge Type	Ø35 mm Ceramic Cartridge
Min. Water Pressure	0,5 bar
Max. Water Pressure	10 bars
Recommended Water Pressure	3 bars
Nominal Flow Rate @3bars	7,2 l/m
Inlet Water Temperature	5°C - 65°C
Supply Connection	450 mm G 3/8" Flexible Connection Hoses
Finishing	Chrome
Body Material	Brass

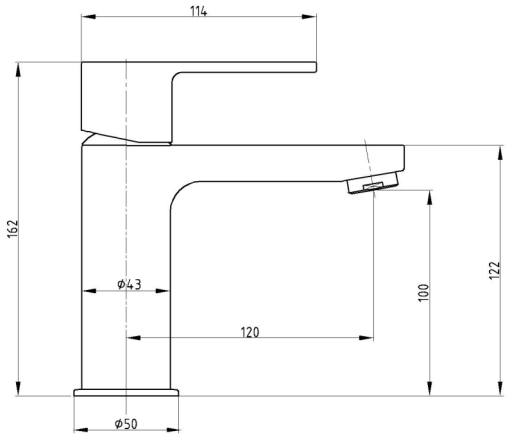

Color Options	
102188034C1EX	Matt Black
102188034C4EX	Matt White

Product Variants	
102188034STEX	Basin Mixer Water Saving 5 l/m
102188047EX	Basin Mixer with Metal Pop-Up Waste Set
102188034xx	xx Localization Product Number
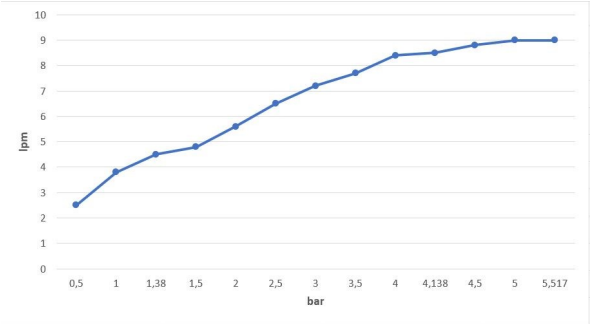
Flow Rate Chart