E.C.A. LOGICA SLIDING RAIL HAND SHOWER SET

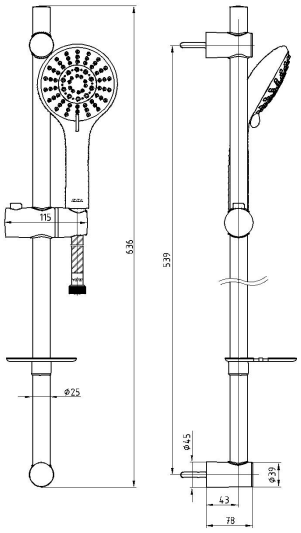

Product Description	
Product Number	102146039EX
Product Name	Five Functions Sliding Rail Hand Shower Set with Soap Holder
EAN Barcode	8693261068661

Technical Specification	
Connection Hose	1,75 m Anti-twist PVC Flexible Hose
Head Sizes of Hand Shower	Ø110 mm
Positioning of Hand Shower Set	Vertically Moveable Bar
Flow Regime	5 Different Flow Type Options
Flow Type Selection	Rotary Adjusting Water Outlet
Min. Water Pressure	0,5 bar
Max. Water Pressure	10 bars
Recommended Water Pressure	3 bars
Nominal Flow Rate @3bars	6,8 l/m
Inlet Water Temperature	5°C - 65°C
Supply Connection	G 1/2" Thread
Finishing	Chrome
Body Material	Brass & Plastic

Product Variants	
102146027EX	Hand Shower Set with 1,5 m Anti-twist Clamped Flexible Hose
102146039xx	xx Localization Product Number
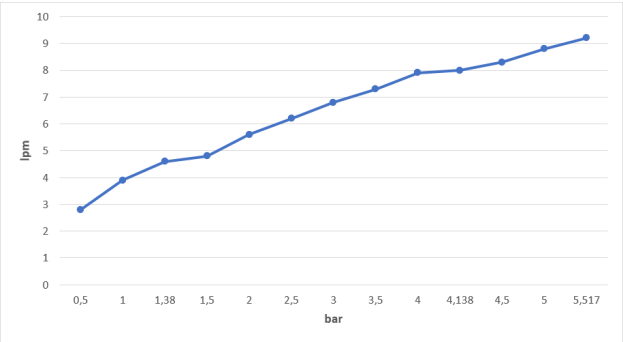
Flow Rate Chart